XL Floor Stand

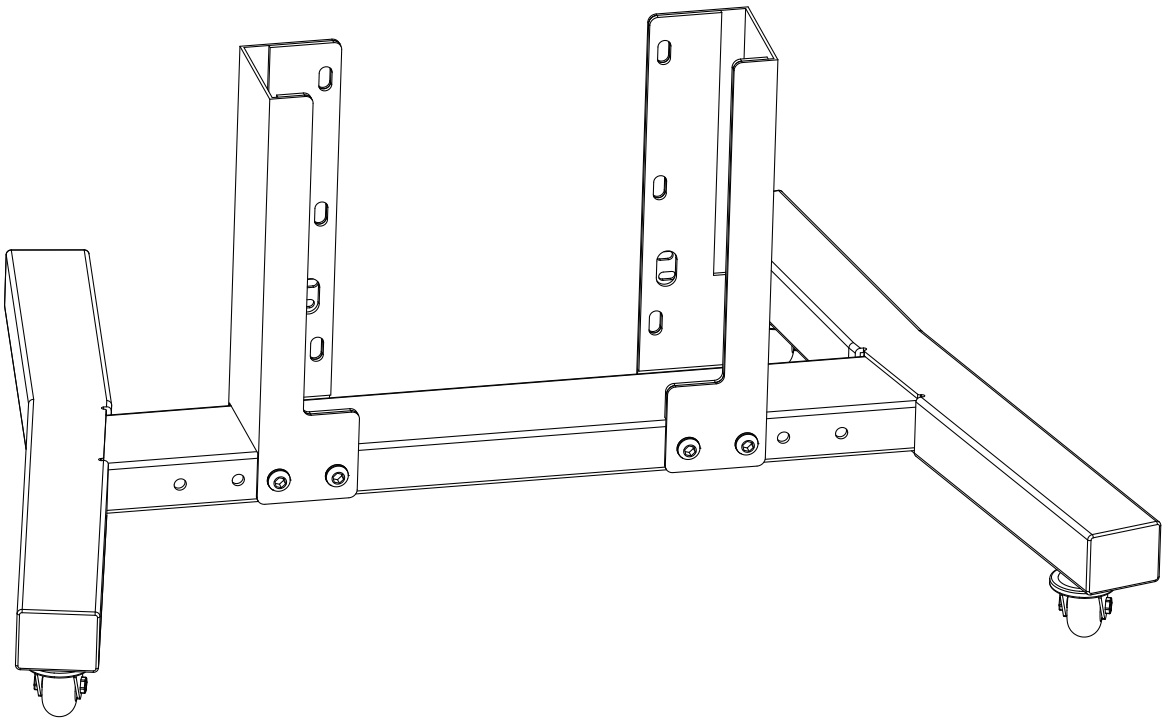

Installation Instructions

WARNING

Please carefully note the following safety warnings:

- Do not install or assemble if the product or hardware is damaged or missing. If you require replacement parts, please contact us for assistance.
- Do not use this product for any purpose other than that for which it was designed.
- Maximum load capacity: 25KG/55LBS.
- This product contains moving parts, please use it with caution.
- We do not cover the following situations: customer product modifications, improper installation or use over the specified weight range.

Parts List

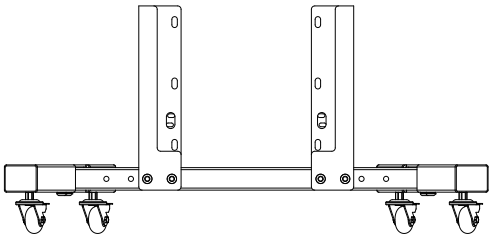

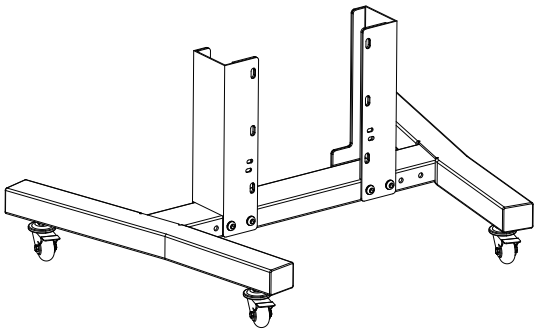

Ax1 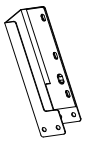	Bx1 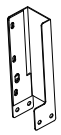
Cx1 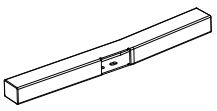	Dx1 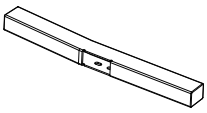
Ex1 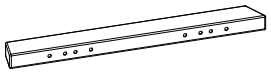	Fx4 
Gx13  M8*10	Hx3  M4*10
Jx2 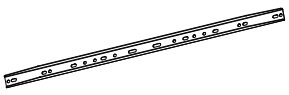	Kx21  M6*6
Lx7 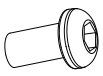 M6*12	x1 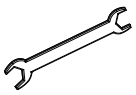 Wrench
x1 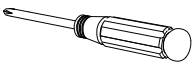 Screwdriver	Px1 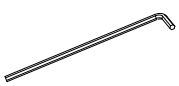 5mm
Qx1  4mm	

Installation Steps for the 30 cm-Wide Panel

Step 1

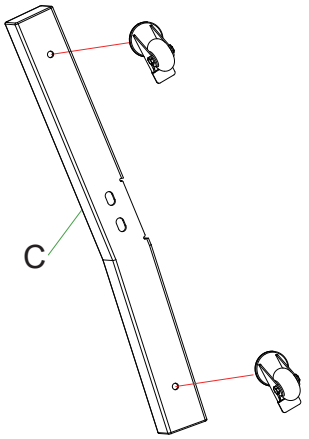

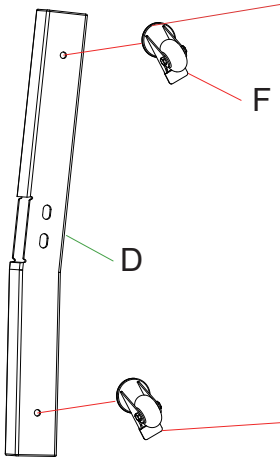



This is the adjustment nut. Adjust the screw as needed during installation.



Lock the caster brakes before installing the casters.

Ensure the screws are secured firmly.

Step 2

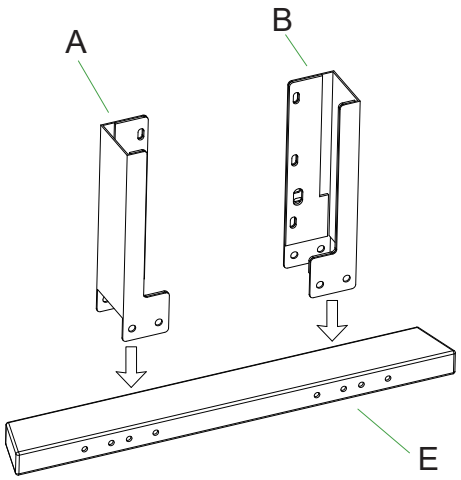

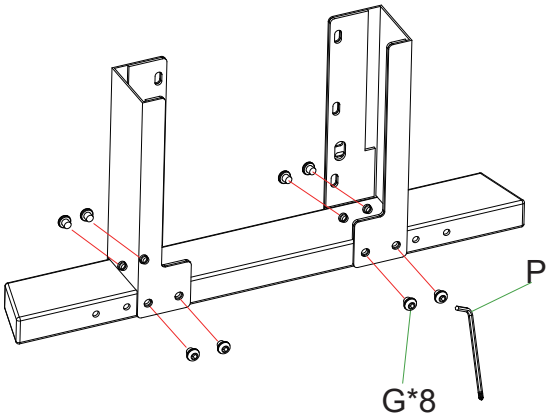

1. Install the left and right vertical brackets onto the chassis cross tube, as shown in the illustration;
2. The two inner holes are where you mount 30 cm-wide panels. Make sure to install the panels in those inner holes.

Ensure the screws are secured firmly.

Installation Steps for the 30 cm-Wide Panel

Step 3

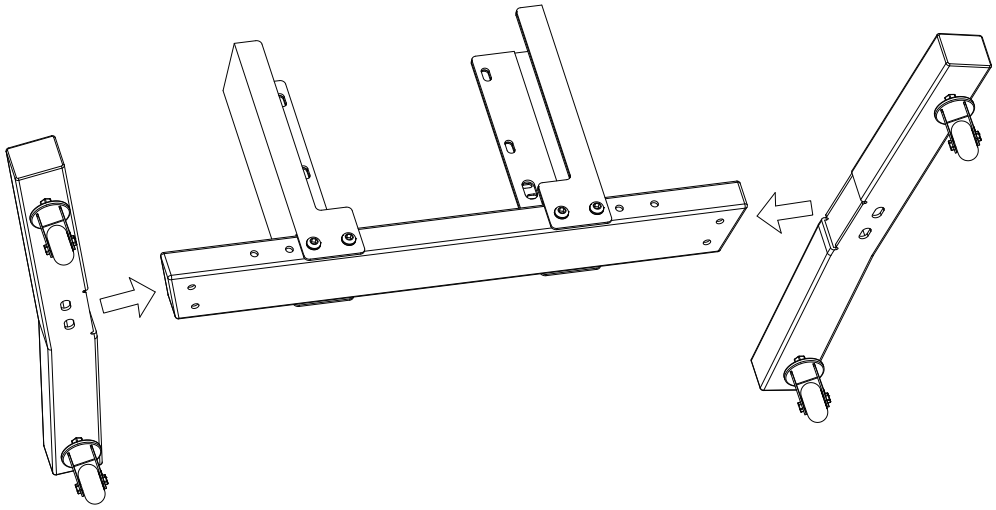

Install the left and right vertical brackets onto the chassis cross tube, as shown in the illustration.

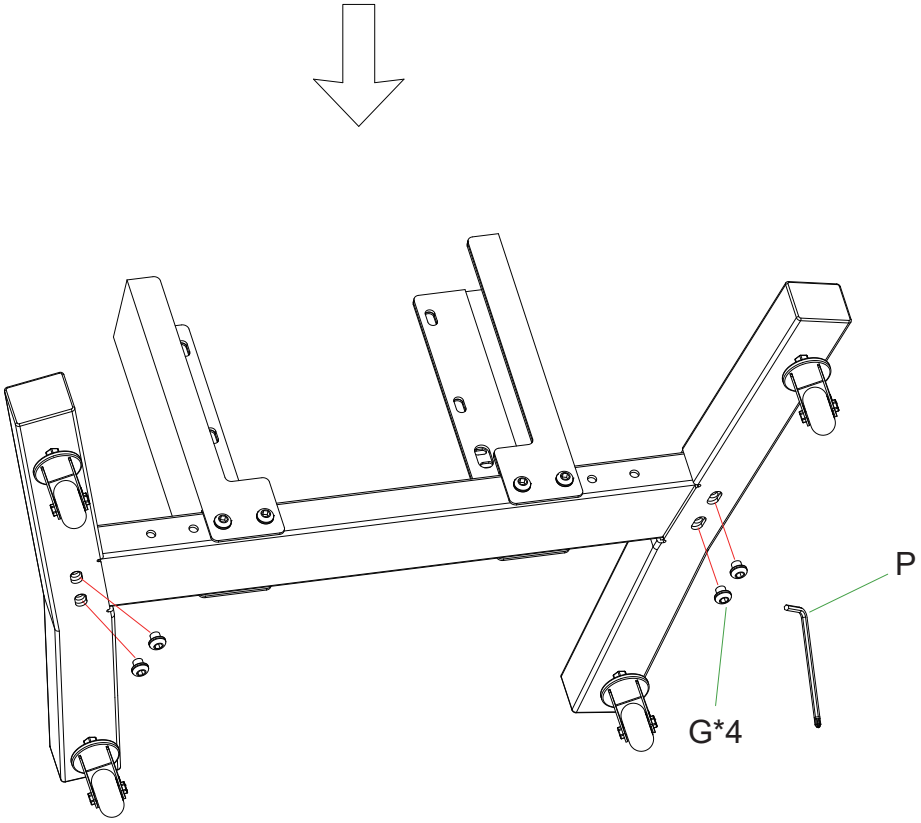

Ensure the screws are secured firmly.

Installation Steps for Two 30 cm-Wide Panels

Step 4

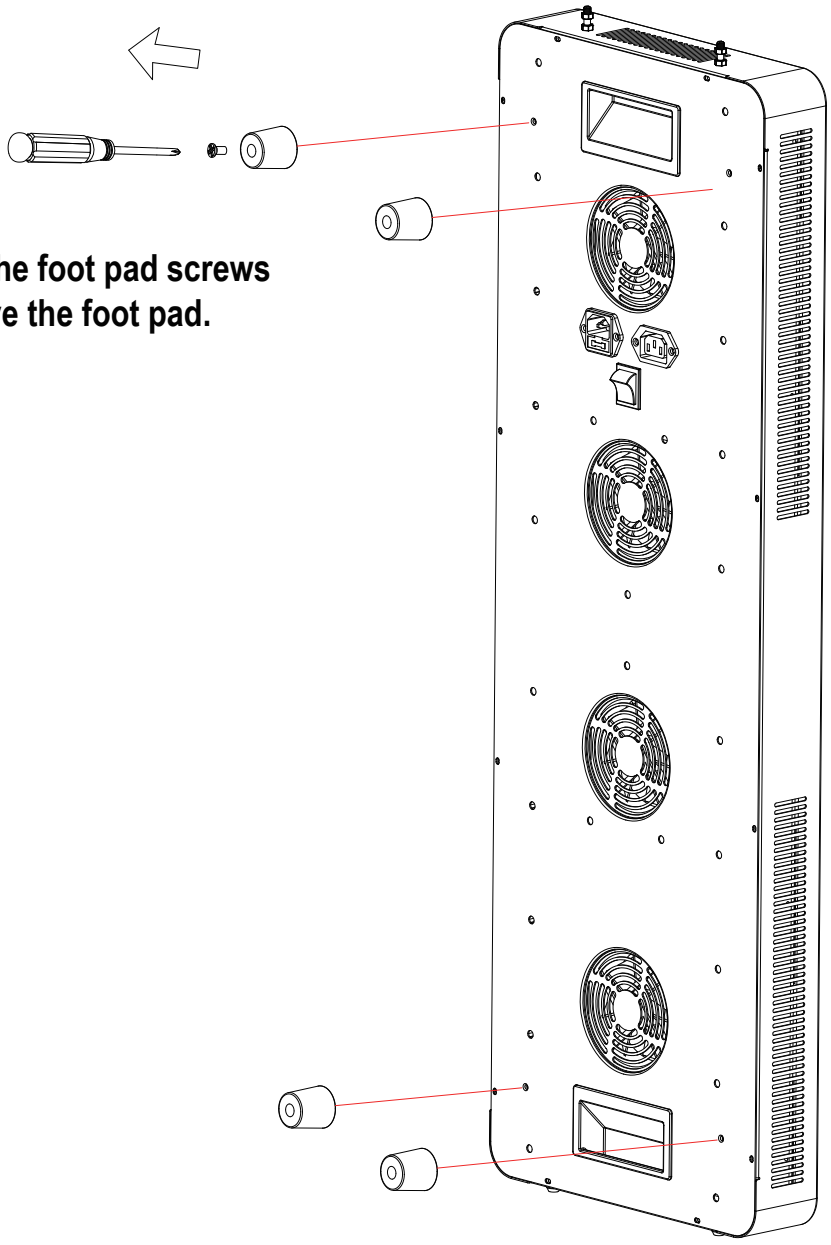

Unscrew the foot pad screws and remove the foot pad.

Installation Steps for Two 30 cm-Wide Panels

Step 5

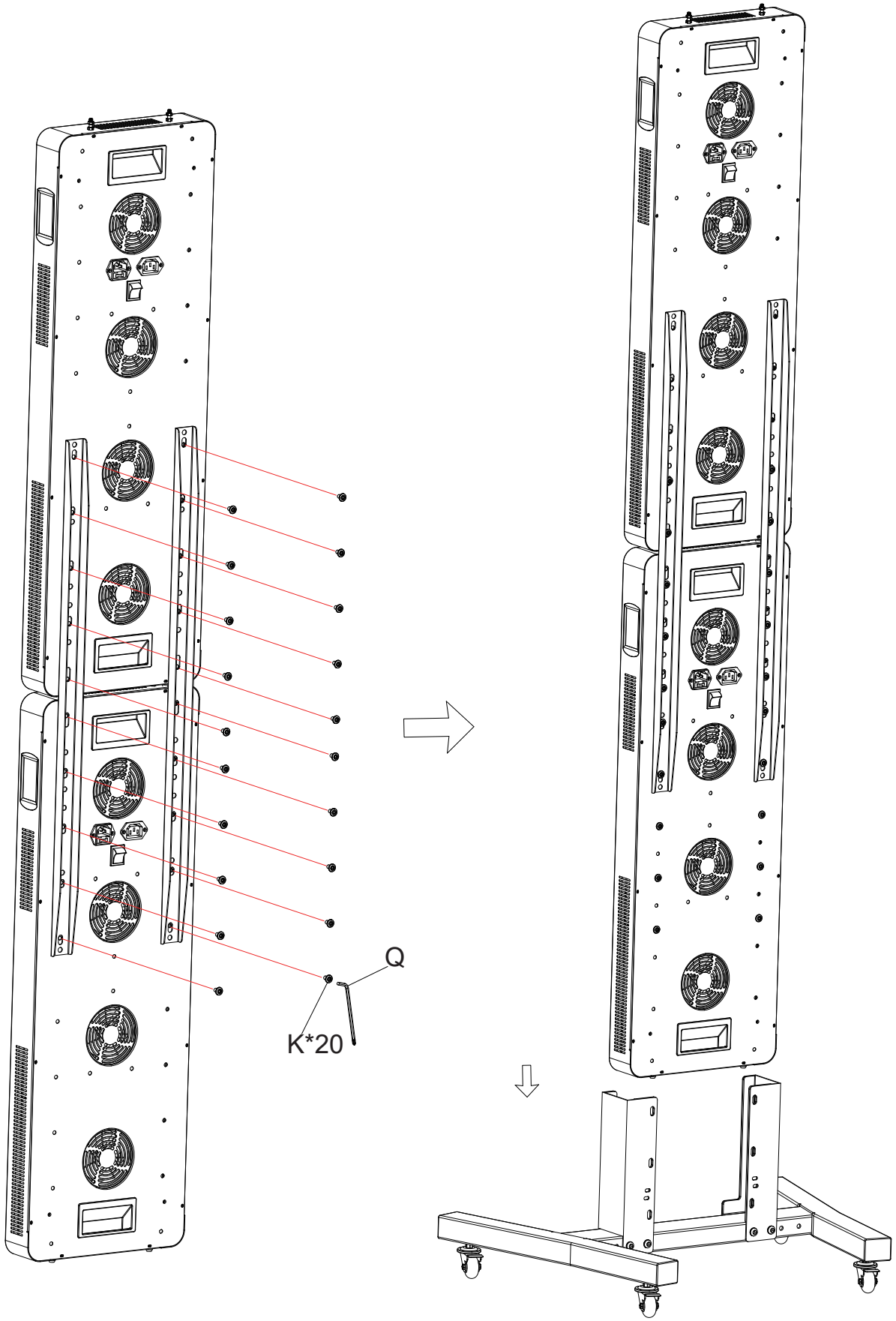

Installation Steps for Two 30 cm-Wide Panels

Step 6

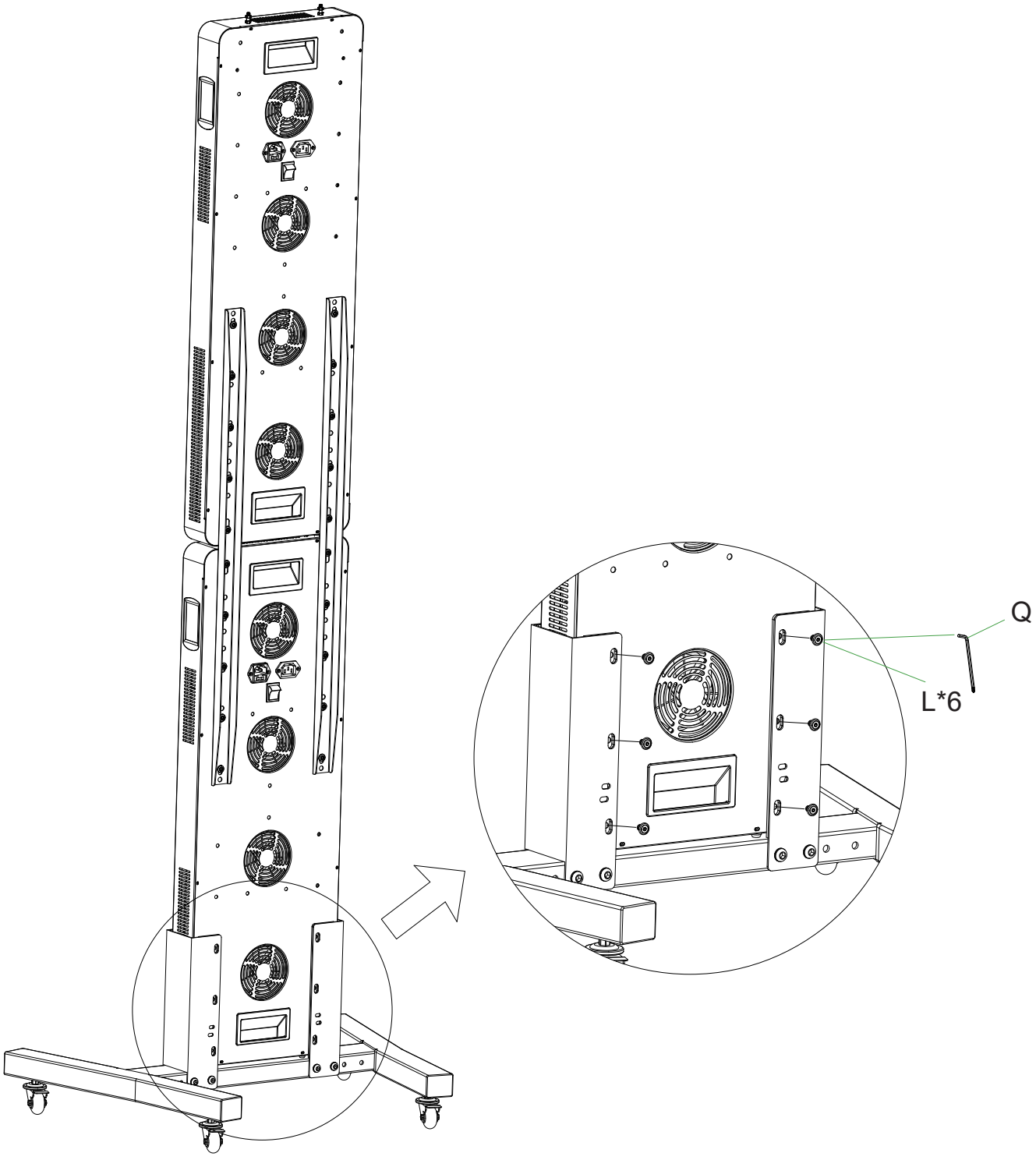

Ensure the screws are secured firmly.

Dimensions

